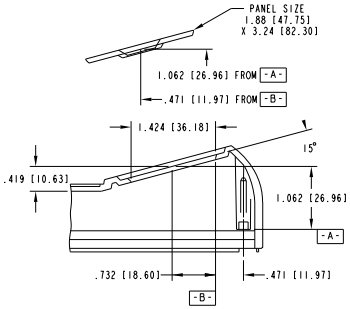

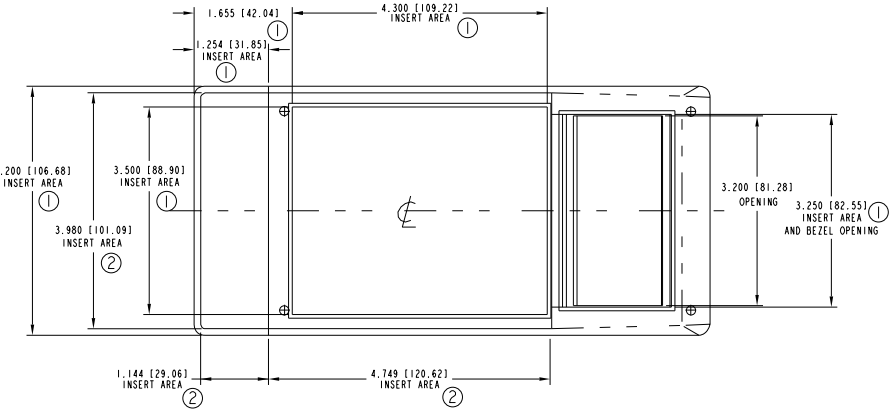

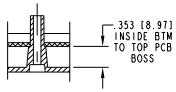

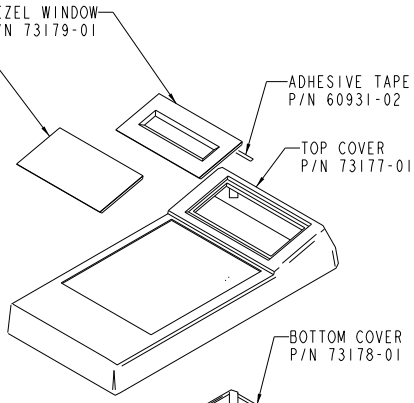

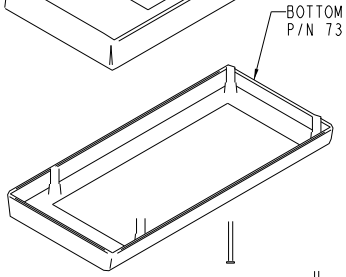

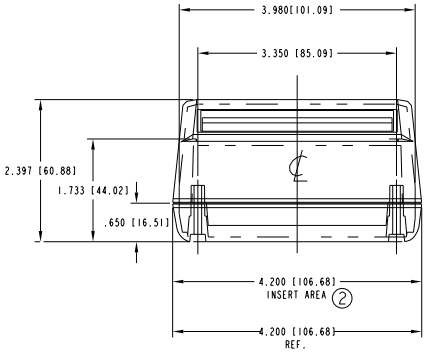

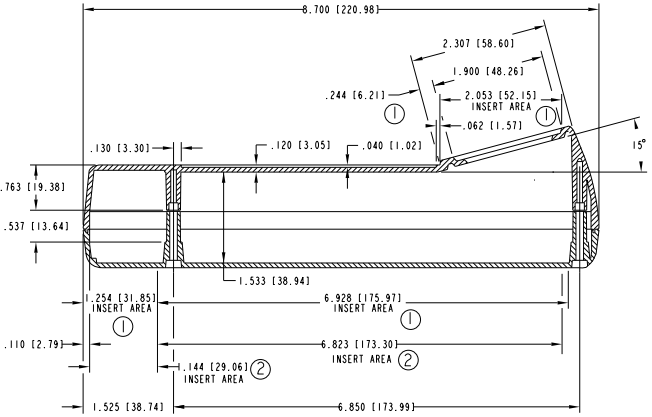

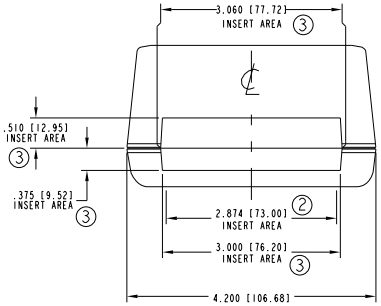

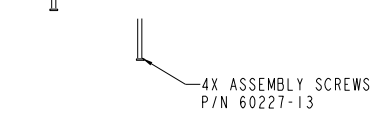

NOTES:
1. EXTERIOR INSERT AREA, FOR IN MOLD MODIFICATION.
2. INTERIOR INSERT AREA, FOR IN MOLD MODIFICATION.
3. END INSERT AREA, FOR IN MOLD MODIFICATION.

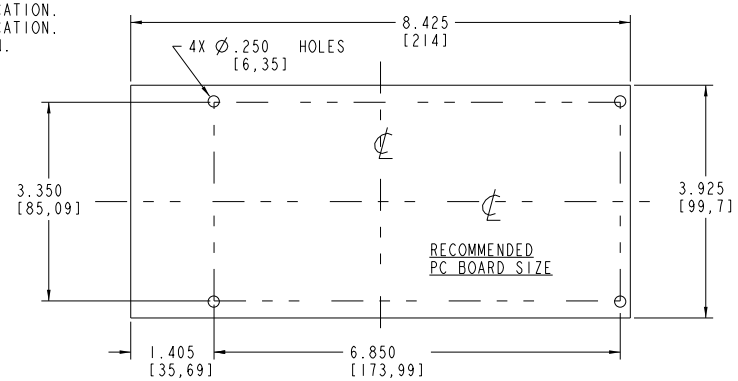

PACTEC®
1-610-361-4200

HPLS-48

VISIT PACTEC®
ON THE WORLD WIDE WEB
www.pactecenclosures.com

COLOR / MATERIAL CODE		
COLOR	94HB	94VO
BLACK	000	028
P.C.BONE	039	060

DRAWING NUMBER	REV
73379	B