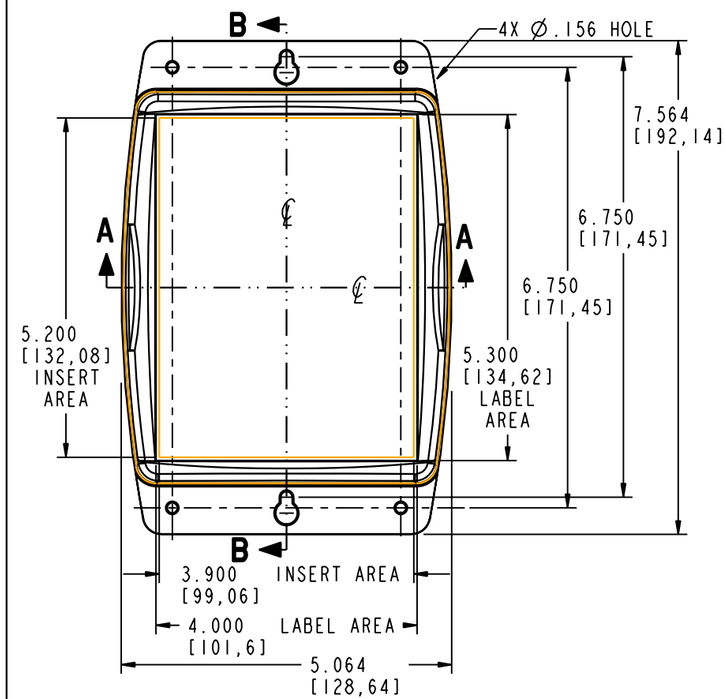


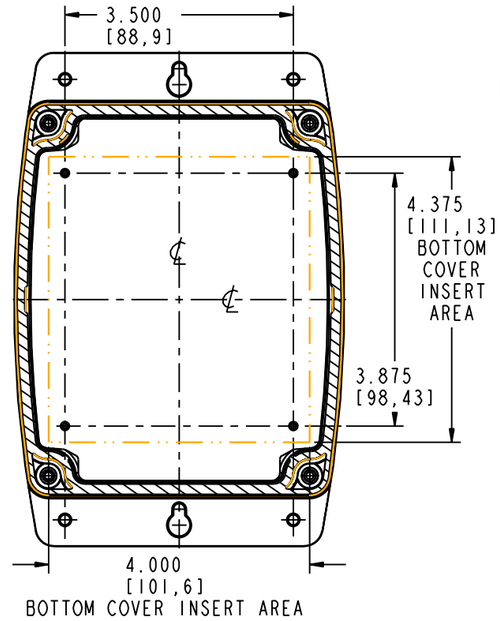


SECTION F-F

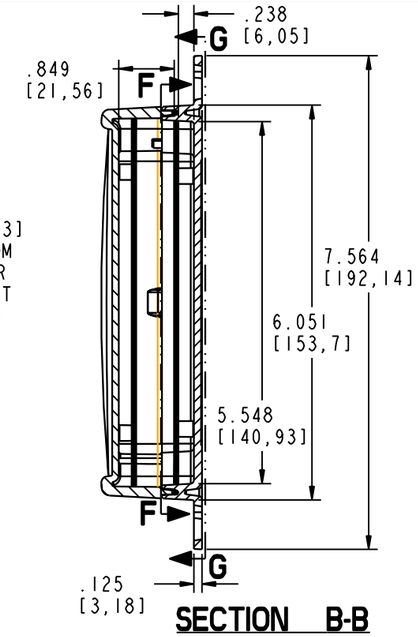


SECTION B-B

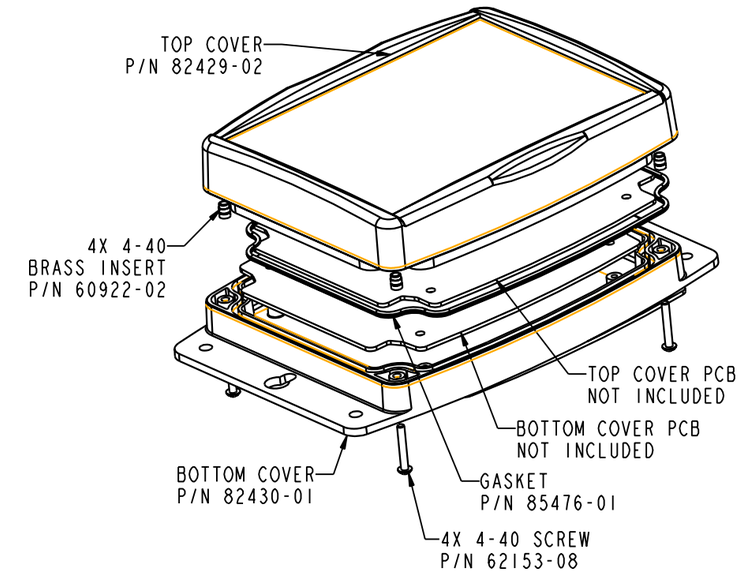


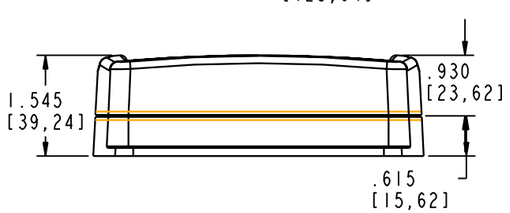


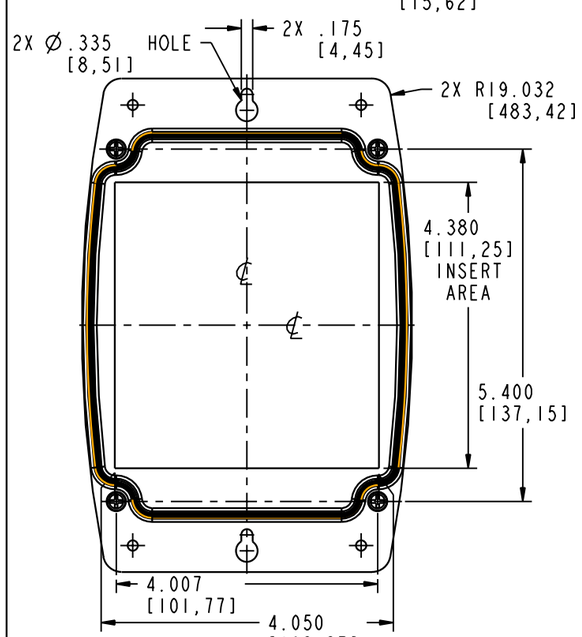


SECTION G-G

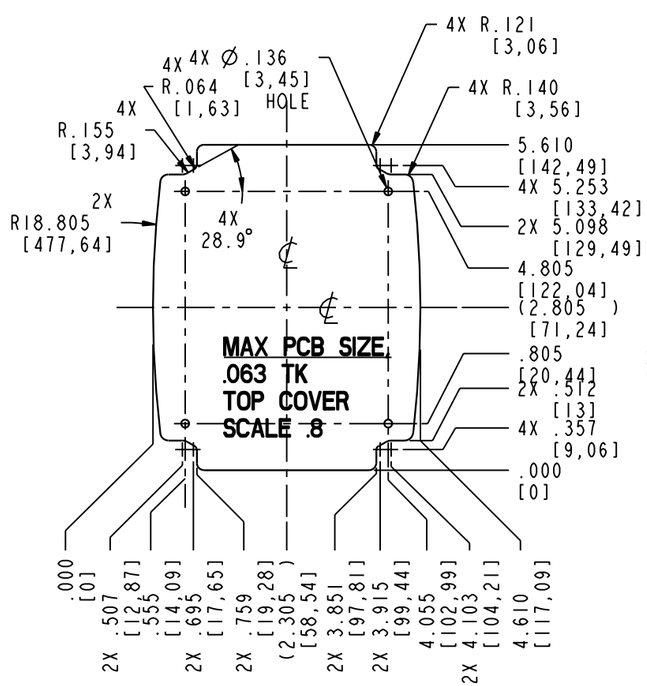


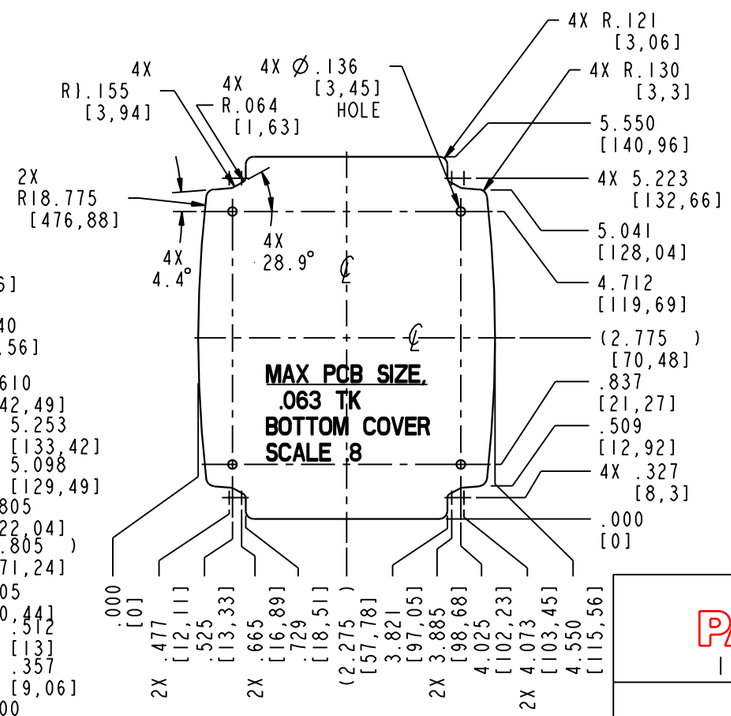


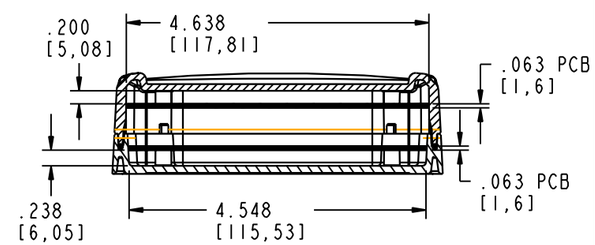


SECTION A-A

NOTES:

1. USE #4 TYPE "B" THREAD FORMING SCREWS X .25 [6.3] OR .31 [7.9] LONG TO MOUNT CIRCUIT CARD ASSEMBLY.

PACTEC®
1-610-361-4231

OD56

VISIT PACTEC®
ON THE WORLD WIDE WEB
www.pactecenclosures.com

MATERIAL:
POLYCARBONATE (HB)
WITH UV STABILIZER

COLOR:
LIGHT GRAY #332

INSERTS AREAS ARE SECTIONS IN OUR TOOLS THAT CAN BE REMOVED AND REPLACED WITH CUSTOMER SPECIFIC DETAILS

| DRAWING NUMBER | REV |
|---|---|
| 82528 | H |