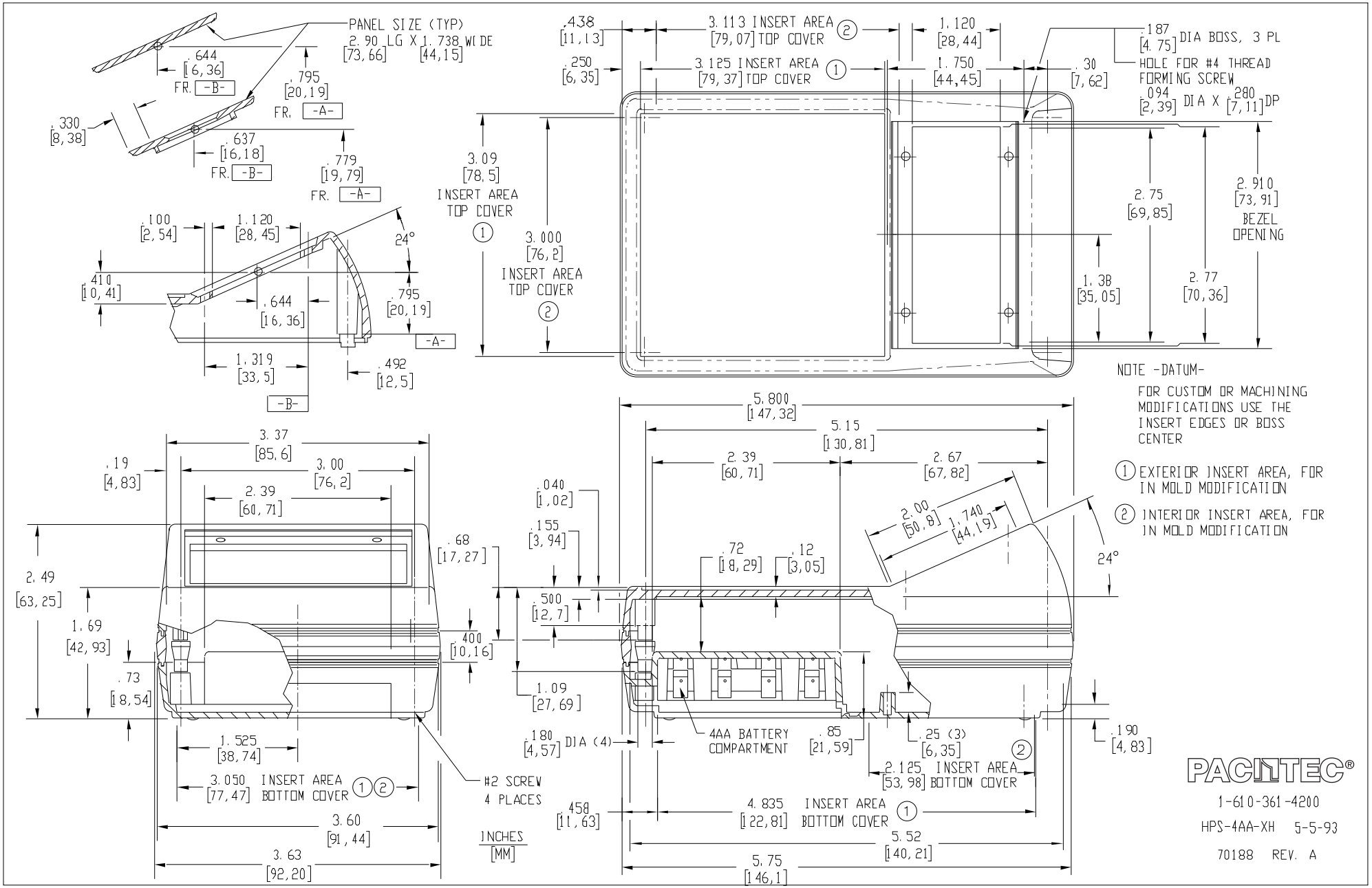
PANEL SIZE (TYP)
2.90 LG X 1.738 WIDE
[73,66] [44,15]
.644 [16,36]
FR. -B-
.795 [20,19]
FR. -A-
.330 [8,38]
.637 [16,18]
FR. -B-
.779 [19,79]
FR. -A-
.100 [2,54]
1.120 [28,45]
24°
.410 [10,41]
.644 [16,36]
.795 [20,19]
-A-
1.319 [33,5]
.492 [12,5]
-B-
.438 [11,13]
3.113 INSERT AREA [79,07] TOP COVER 2
1.120 [28,44]
.187 [4.75] DIA BOSS, 3 PL
HOLE FOR #4 THREAD FORMING SCREW
.250 [6,35]
3.125 INSERT AREA [79,37] TOP COVER 1
1.750 [44,45]
.30 [7,62]
.094 [2,39] DIA X .280 [7,11] DP
3.09 [78,5] INSERT AREA TOP COVER 1
3.000 [76,2] INSERT AREA TOP COVER 2
2.75 [69,85]
2.910 [73,91] BEZEL OPENING
1.38 [35,05]
2.77 [70,36]
NOTE -DATUM-
FOR CUSTOM OR MACHINING MODIFICATIONS USE THE INSERT EDGES OR BOSS CENTER
1 EXTERIOR INSERT AREA, FOR IN MOLD MODIFICATION
2 INTERIOR INSERT AREA, FOR IN MOLD MODIFICATION
5.800 [147,32]
5.15 [130,81]
2.39 [60,71]
2.67 [67,82]
3.37 [85,6]
.19 [4,83]
3.00 [76,2]
2.39 [60,71]
.040 [1,02]
.155 [3,94]
2.00 [50,8]
1.740 [44,19]
.68 [17,27]
.72 [18,29]
.12 [3,05]
24°
2.49 [63,25]
.500 [12,7]
1.69 [42,93]
.400 [10,16]
.73 [18,54]
1.09 [27,69]
.190 [4,83]
1.525 [38,74]
.180 [4,57] DIA (4)
4AA BATTERY COMPARTMENT
.85 [21,59]
.25 (3) [6,35]
2
2.125 INSERT AREA [53,98] BOTTOM COVER
3.050 [77,47] INSERT AREA BOTTOM COVER 1 2
#2 SCREW 4 PLACES
.458 [11,63]
4.835 [122,81] INSERT AREA BOTTOM COVER 1
3.60 [91,44]
INCHES [MM]
5.52 [140,21]
3.63 [92,20]
5.75 [146,1]
PACITEC®
1-610-361-4200
HPS-4AA-XH 5-5-93
70188 REV. A