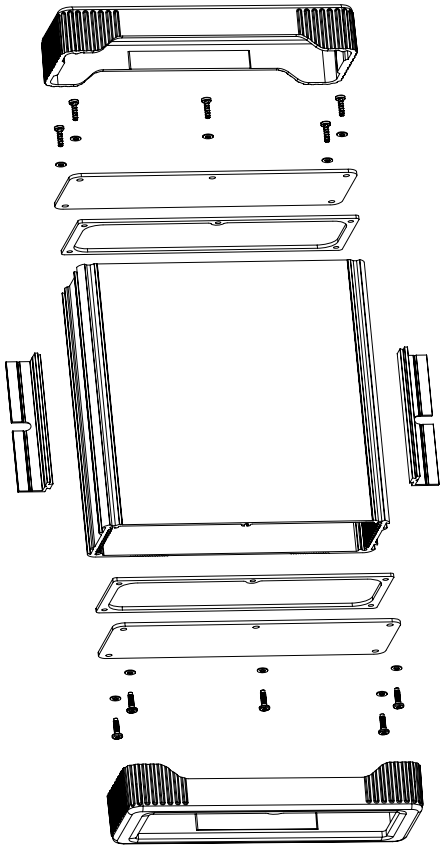

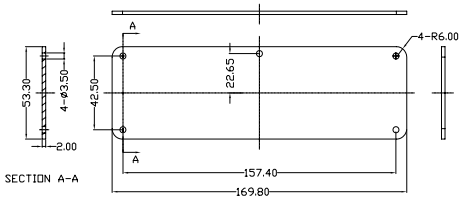

END PLATE

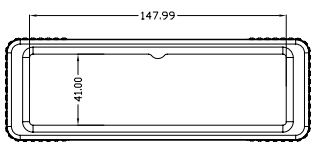

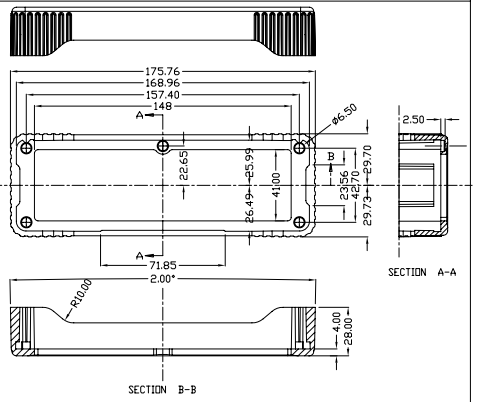

EC4_END_CAP_OPTIONAL_ACCESSORY

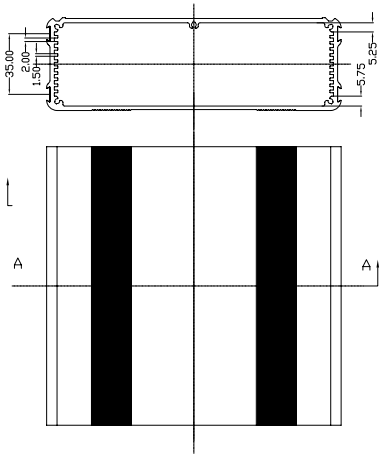

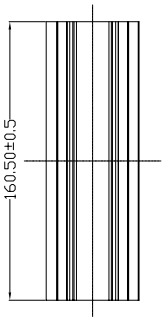

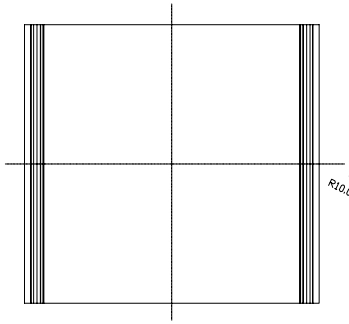

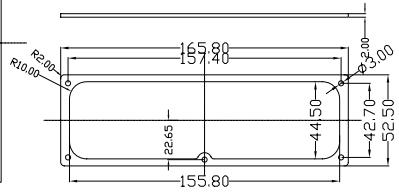

SK-4 SEALING KIT
OPTIONAL ACCESSORY

Mounting Flanges Optional Accessory (Sold individually)	
40 mm Mounting Flange Part #	Color
MF40-BK	Black
MF40-BL	Blue
MF40-GD	Gold
MF40-GR	Green
MF40-RD	Red
MF40-SI	Silver
80 mm Mounting Flange Part #	Color
MF80-BK	Black
MF80-BL	Blue
MF80-GD	Gold
MF80-GR	Green
MF80-RD	Red
MF80-SI	Silver

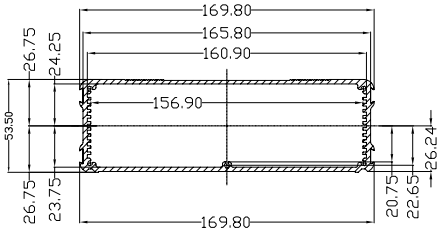

SECTION A-A

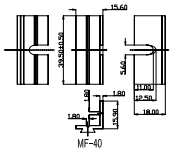

MF-40
OPTIONAL ACCESSORY

COLOR LEGEND	
Part #	Anodized Color
B4-160 BK	Black
B4-160 BL	Blue
B4-160 GD	Gold
B4-160 GR	Green
B4-160 RD	Red
B4-160 SI	Silver

Optional End Caps (sold in pairs)	
Part #	Color
EC-4BK	Black
EC-4BL	Blue
EC-4GN	Green
EC-4RD	Red
EC-4GY	Gray

Sealing Kit - Optional Accessory	
Part #	Description
SK-4	NEM 4/IP65 Sealing kit for ALL B-4 Series Enclosures

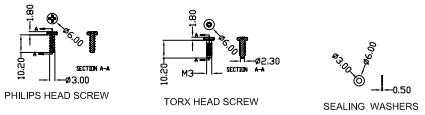

PHILIPS HEAD SCREW

TORX HEAD SCREW

SEALING WASHERS

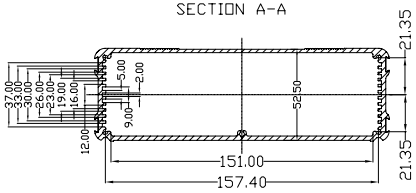

SECTION A-A

ENCLOSURE PROFILE

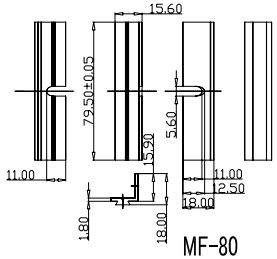

MF-80
OPTIONAL ACCESSORY

ENCLOSURES & ASSEMBLY SERVICES

Title: B4-160 MASTER DRAWING		Revision:
Material: Aluminum 6063-T6(HE9)	TOLERANCE all dimension in mm unless otherwise specified. × ±0.40 .x ±0.20 .xx ±0.10 ANGLE ±1°	Drn. Date PAN 2009-04-08
Finish: Anodized BS 1615		Chk. Date
Proj.		App. Date

THIS DRAWING IS THE PROPERTY OF AND MAY EMBODY PROPRIETARY INFORMATION OWNED BY Box Enclosures . IT IS PROVIDED UNDER A CONFIDENTIAL RELATIONSHIP FOR A SPECIFIC PURPOSE. THE RECIPIENT AGREES TO USE IT ONLY FOR SUCH PURPOSE AND RETURN IT TO Box Enclosure UPON REQUEST.