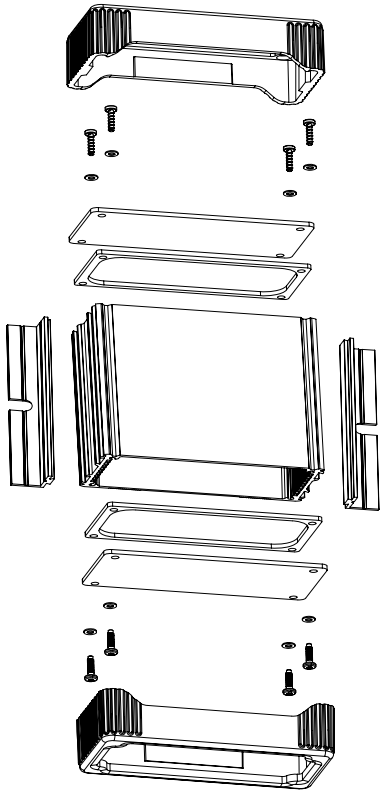

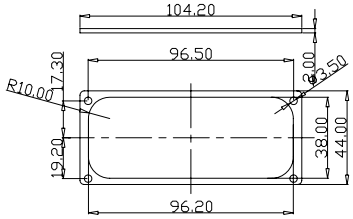

SK-3 SEALING KIT
OPTIONAL ACCESSORY

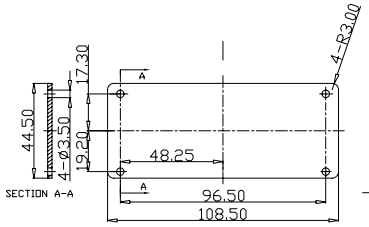

END PLATE

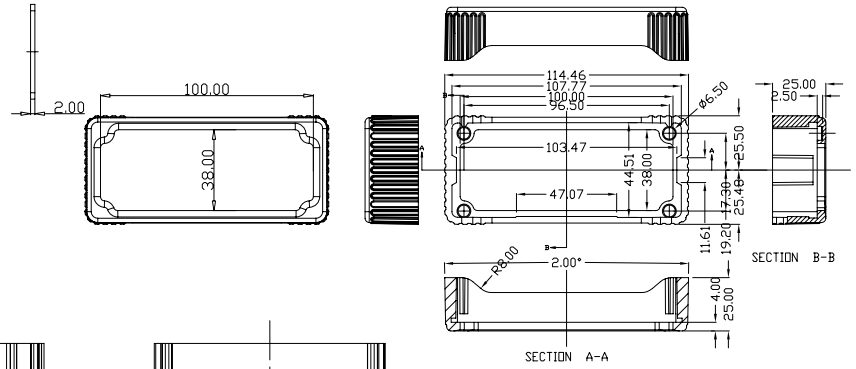

EC3_END_CAP_OPTIONAL_ACCESSORY

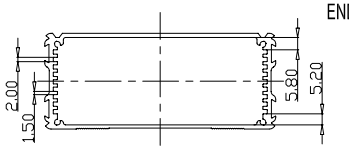

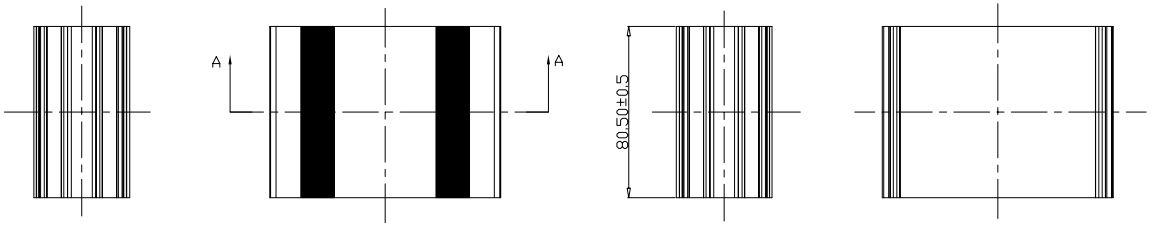

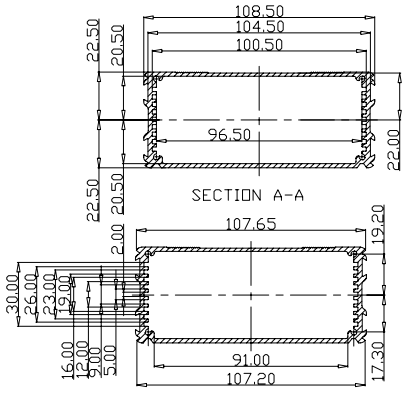

ENCLOSURE PROFILE

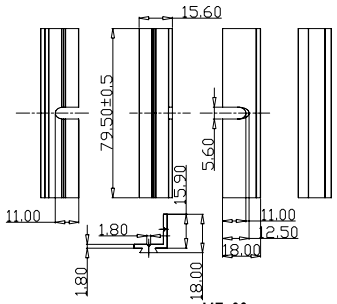

MF-80
OPTIONAL ACCESSORY

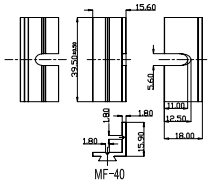

MF-40
OPTIONAL ACCESSORY

Mounting Flanges Optional Accessory (Sold individually)	
40 mm Mounting Flange Part #	Color
MF40-BK	Black
MF40-BL	Blue
MF40-GD	Gold
MF40-GR	Green
MF40-RD	Red
MF40-SI	Silver
80 mm Mounting Flange Part #	Color
MF80-BK	Black
MF80-BL	Blue
MF80-GD	Gold
MF80-GR	Green
MF80-RD	Red
MF80-SI	Silver

COLOR LEGEND	
Part #	Anodized Color
B3-080 BK	Black
B3-080 BL	Blue
B3-080 GD	Gold
B3-080 GR	Green
B3-080 RD	Red
B3-080 SI	Silver

Optional End Caps (sold in pairs)	
Part #	Color
EC-3BK	Black
EC-3BL	Blue
EC-3GN	Green
EC-3RD	Red
EC-3GY	Gray

Sealing Kit - Optional Accessory	
Part #	Description
SK-3	NEM 4/IP65 Sealing kit for ALL B-3 Series Enclosures

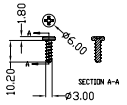

PHILIPS HEAD SCREW

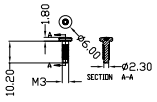

TORX HEAD SCREW

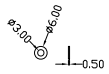

SEALING WASHERS

ENCLOSURES & ASSEMBLY SERVICES

Title	Revision:
B3-080 MASTER DRAWING	

Material:	TOLERANCE	Drn. Date
Aluminum 6063-T6(HE9)	all dimension in mm unless otherwise specified.	PAN 2009-09-22
Finish: Anodized BS 1615	x ±0.40 .x ±0.30 .xx ±0.20 ANGLE ±1°	Chk. Date
Proj		App. Date

THIS DRAWING IS THE PROPERTY OF AND MAY EMBODY PROPRIETARY INFORMATION OWNED BY Box Enclosures . IT IS PROVIDED UNDER A CONFIDENTIAL RELATIONSHIP FOR A SPECIFIC PURPOSE. THE RECIPIENT AGREES TO USE IT ONLY FOR SUCH PURPOSE AND RETURN IT TO Box Enclosure UPON REQUEST.