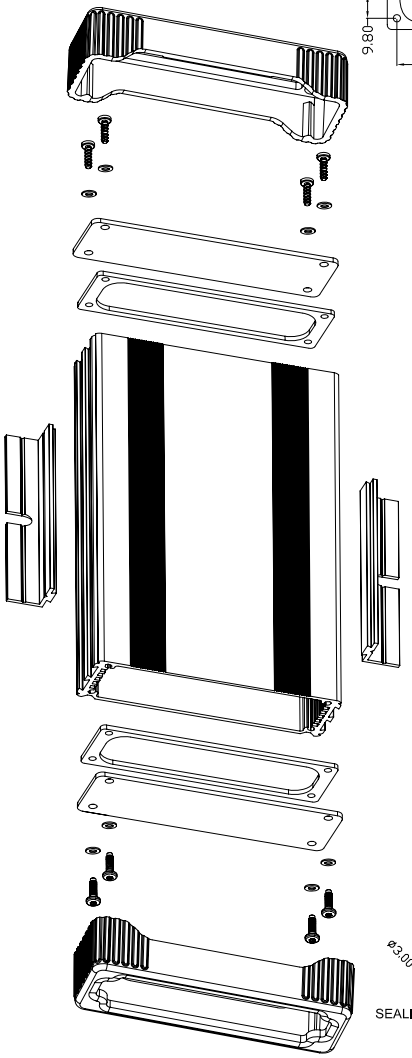

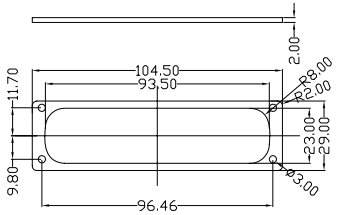

SK-2 SEALING KIT
OPTIONAL ACCESSORY

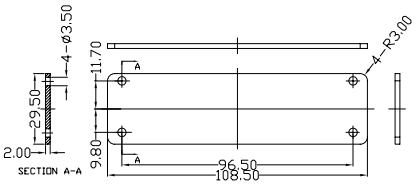

END PLATE

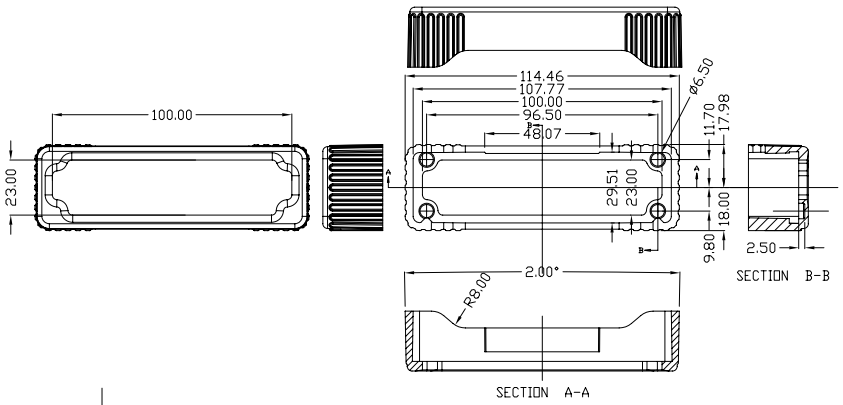

EC2 End Cap Optional Accessory

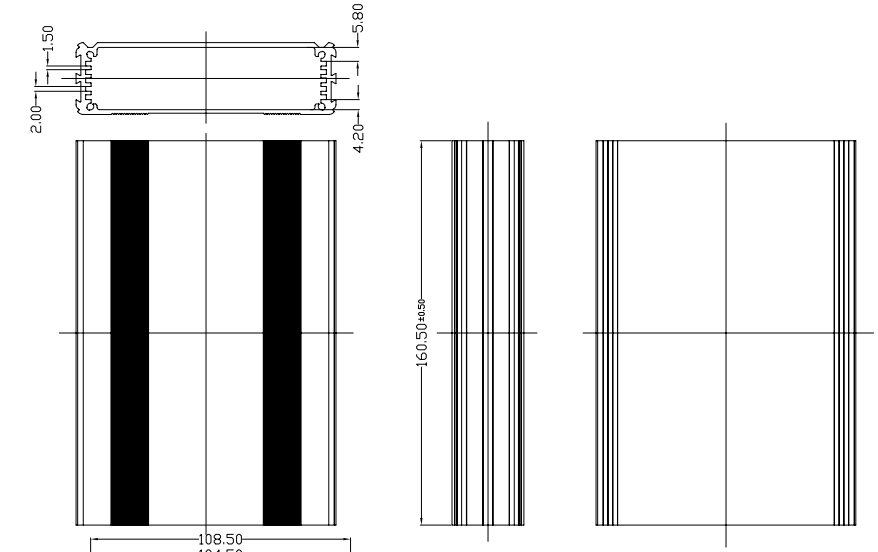

ENCLOSURE PROFILE

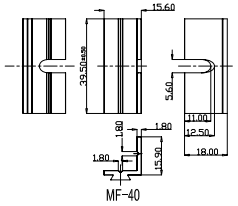

MF-40
OPTIONAL ACCESSORY

Mounting Flanges Optional Accessory (Sold individually)	
40 mm Mounting Flange Part #	Color
MF40-BK	Black
MF40-BL	Blue
MF40-GD	Gold
MF40-GR	Green
MF40-RD	Red
MF40-SI	Silver
80 mm Mounting Flange Part #	Color
MF80-BK	Black
MF80-BL	Blue
MF80-GD	Gold
MF80-GR	Green
MF80-RD	Red
MF80-SI	Silver

COLOR LEGEND	
Part #	Anodized Color
B2-160 BK	Black
B2-160 BL	Blue
B2-160 GD	Gold
B2-160 GR	Green
B2-160 RD	Red
B2-160 SI	Silver

Optional End Caps (sold in pairs)	
Part #	Color
EC-2BK	Black
EC-2BL	Blue
EC-2GN	Green
EC-2RD	Red
EC-2GY	Gray

Sealing Kit - Optional Accessory	
Part #	Description
SK-2	NEM 4/IP65 Sealing kit for ALL B-2 Series Enclosures

SEALING WASHERS

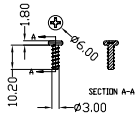

PHILIPS HEAD SCREW

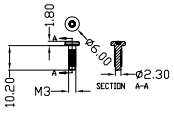

TORX HEAD SCREW

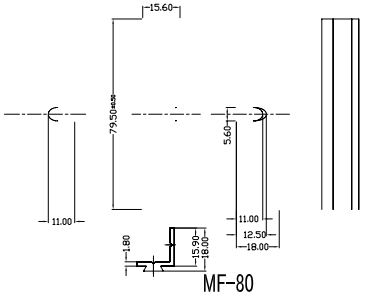

MF-80
OPTIONAL ACCESSORY

ENCLOSURES & ASSEMBLY SERVICES

Title	B2-160 MASTER DRAWING	Revision:
Material: Aluminum 6063-T6(HE9)	TOLERANCE all dimension in mm unless otherwise specified. × ±0.40 .x ±0.20 .xx ±0.10 ANGLE ±1°	Drn. Date PAN 2009-04-08
Finish: Anodized BS 1615		Chk. Date
Proj		App. Date

THIS DRAWING IS THE PROPERTY OF AND MAY EMBODY PROPRIETARY INFORMATION OWNED BY Box Enclosures . IT IS PROVIDED UNDER A CONFIDENTIAL RELATIONSHIP FOR A SPECIFIC PURPOSE. THE RECIPIENT AGREES TO USE IT ONLY FOR SUCH PURPOSE AND RETURN IT TO Box Enclosure UPON REQUEST.